therein except to the extent foregoing does not apply
e expressly granted to others. This proprietary parts

B	REDRAW & REDESIGN DCN 11014		TG.
C	ADD -7, NOTE 6		JDL
D	ADD 8-32 MOUNTING HOLES	9-13-91	

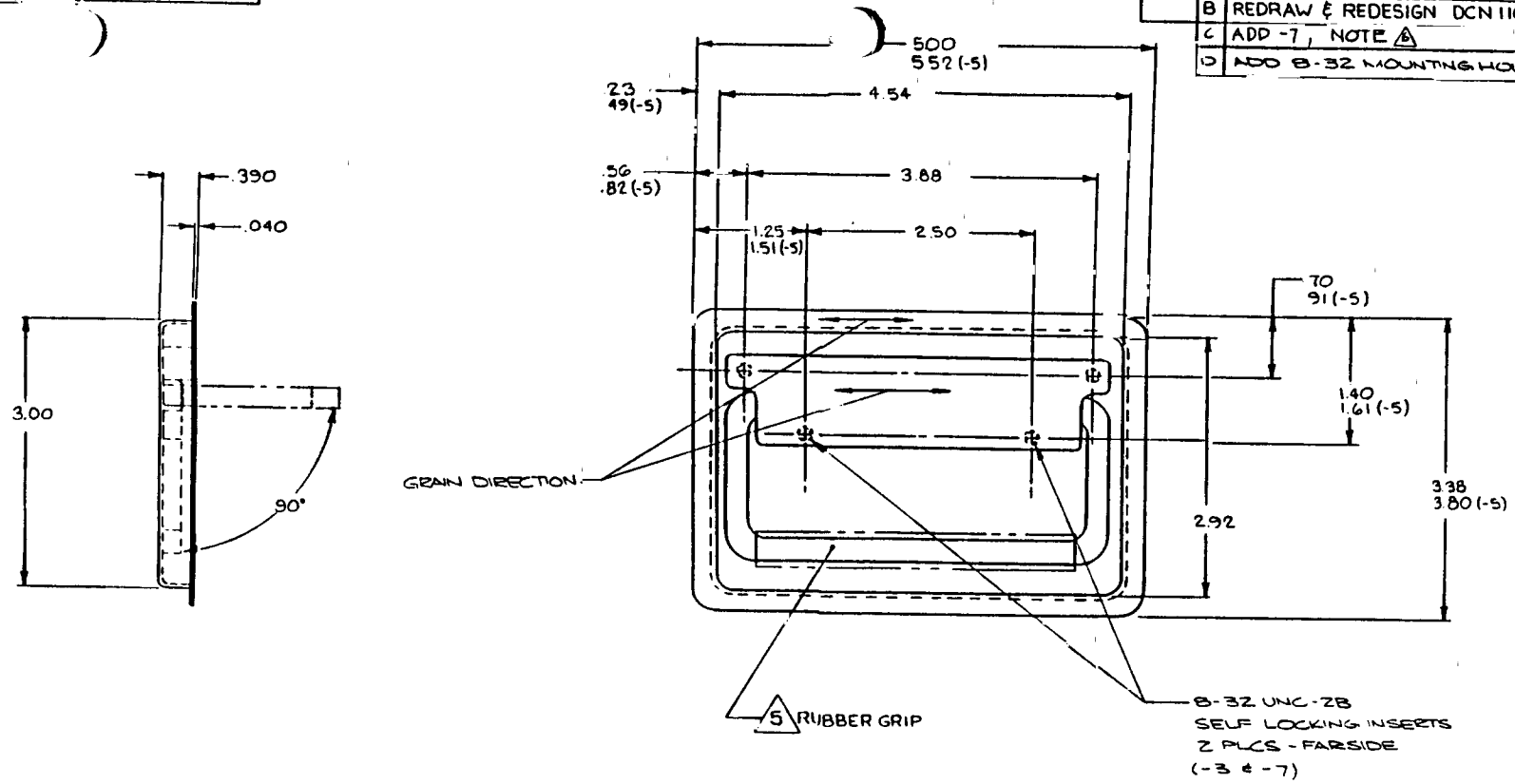

6 MAT'L: CASE, HANDLE AND HOUSING — ALUM ALLOY

5 MAT'L: ID x .040 WALL BLACK NEOPRENE

4 DECORATIVE FINISH: SATIN BUFF

3 PROTECTIVE FINISH: PASSIVATE

2 MAT'L: 300 SERIES CRES

1. REMOVE ALL BURRS AND SHARP CORNERS.

NOTES: UNLESS OTHERWISE SPECIFIED.

qty reqd	part no	description	material size specification	item no
	-7	HANDLE ASSY	SAME AS -3 EXCEPT AS NOTED 6	
	-5	HANDLE ASSY	SAME AS -3 EXCEPT AS NOTED 2	
	-3	HANDLE ASSY	2	
	-1	HANDLE ASSY	OBSOLETE 2-18-88	

parts list

used on	next assy	final assy
application		qty reqd

unless otherwise specified

interpret drawing in accordance with MIL-D-1000

remove all burrs break sharp edges .010 max

all corner and fillet radii to be .020 max

unless otherwise specified

dimensions are in inches

tolerances on
decimals: .x ± .1, .xx ± .03, .xxx ± .010
angles: ± 0° 30'
drilled holes: AND 10387

do not scale this drawing

material — finish

drawn by	SINGELAKIS, T	7/18/86
checked		
engineer		
project		
approval		
approval		2/18/88

Skytock Industries Incorporated
Monrovia California

PULL HANDLE

size	code ident no	drawing no	rev
C	51941	20274	D

scale 1/1 | wt | sheet 1 of 1