THE INFORMATION AND DESIGN HEREIN WAS ORIGINATED BY AND IS THE PROPERTY OF SKYLOCK INDUSTRIES INCORPORATED. SKYLOCK INDUSTRIES INCORPORATED RESERVES ALL PATENT, PROPRIETARY, DESIGN MANUFACTURING, REPRODUCTION, USE AND SALES RIGHTS THERETO, AND TO ANY ARTICLE DISCLOSED THEREIN EXCEPT TO THE EXTENT RIGHTS ARE EXPRESSLY GRANTED TO OTHERS. THE FOREGOING DOES NOT APPLY TO VENDOR PROPRIETARY PARTS.

REVISIONS

ZONE	LTR	DESCRIPTION	DATE	APPROVED
	NC	PRODUCTION RELEASE	5/18/99	T. CSIK

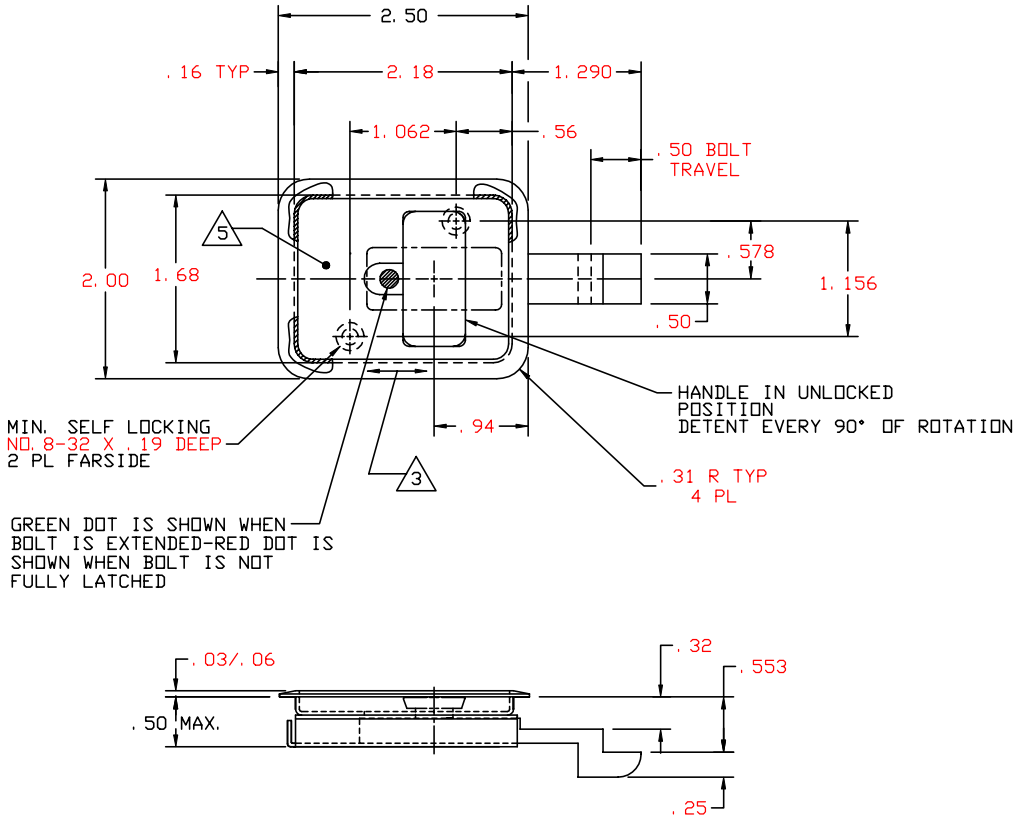

-1 LATCH

6. PER FAR 45.15. PARTS WILL BE IDENTIFIED WITH:
   1. FAA-PMA.
   2. SKYLOCK IND. INC.
   3. PART NO.
   4. AIRCRAFT ELIGIBILITY.

5 DECORATIVE FINISH REF.: GLASS BEAD PEEN USING #70-140 GLASS BEAD MEDIA AT 50-60 PSI, BASE OF CASE ONLY.

4. OPERATING INSTRUCTIONS: FOR POSITIVE LOCKING OF LATCH ASSY. ROTATE HANDLE 90° CLOCKWISE OR COUNTER CLOCKWISE. HANDLE DETENTED IN THIS POSITION. TO UNLOCK ROTATE HANDLE CLOCKWISE OR COUNTER CLOCKWISE AND RETRACT BOLT.

3 DECORATIVE FINISH REF.: SATIN BRUSH DIRECTION NOTED.

2. MAT'L REF.: HANDLE, 6061-T6/T651 PER ASTM B-221 OR EQUIV. ALL OTHER PARTS, 303 CRES, COND. A, PER AMS-5640N OR EQUIV.

1. REMOVE ALL BURRS AND SHARP CORNERS.

NOTES: UNLESS OTHERWISE SPECIFIED

PART NO.	DESCRIPTION	MATERIAL SIZE APPLICATION	MAKE FROM
-1	LATCH		120968-401

PARTS LIST

UNLESS OHERWISE SPECIFIED
DIMENSIONS ARE IN INCHES
TOLERANCES ON
DECIMALS .X ± .1 .XX ± .03 .XXX ± .010
ANGLES ± 0° 30'
DRILLED HOLES AND 10387

DRAWN BY	SINGELAKIS T.	9/30/88
CHECKED	T. CSIK	5/18/99
ENGINEER	T. CSIK	5/18/99
MFG	P. MATSUOKA	5/20/99
QC	J. VIVIRITO	5/24/99

DO NOT SCALE THIS DRAWING

MATERIAL - FINISH

USED ON

NEXT ASSY

MANUFACTURE IN ACCORDANCE WITH SKYLOCK IND. INC., QUALITY CONRTOL MANUAL QC.001

SKYLOCK INDUSTRIES INCORPORATED
MONROVIA CALIFORNIA U.S.A.

LATCH

SIZE	CODE IDENT. NO.	DRAWING NO.	REV.
C	51941	20968	NC

SCALE 2:1 WT. SHEET 1 OF 1